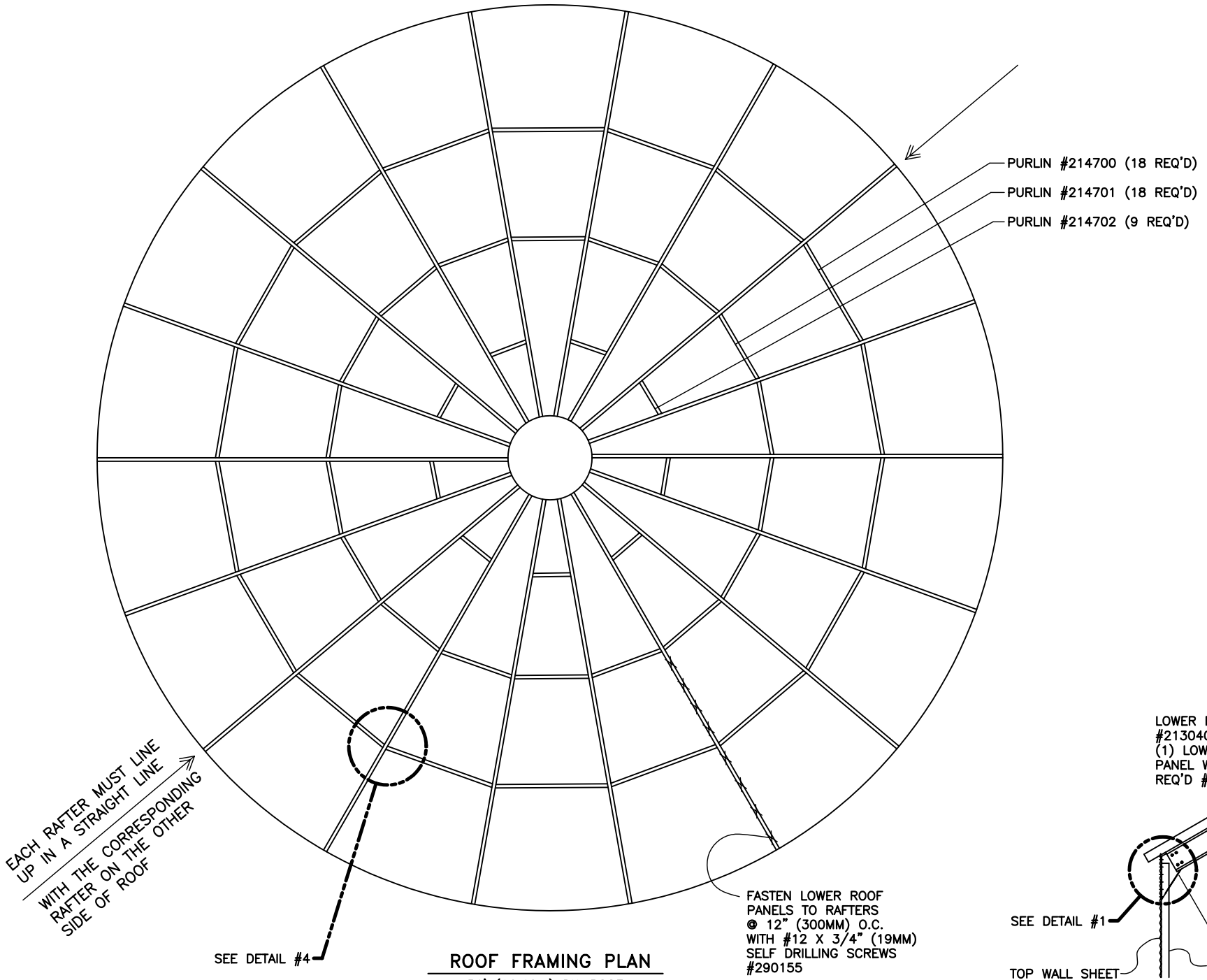

ROOF FRAMING PLAN

54' (16.46m) DIA ROOF

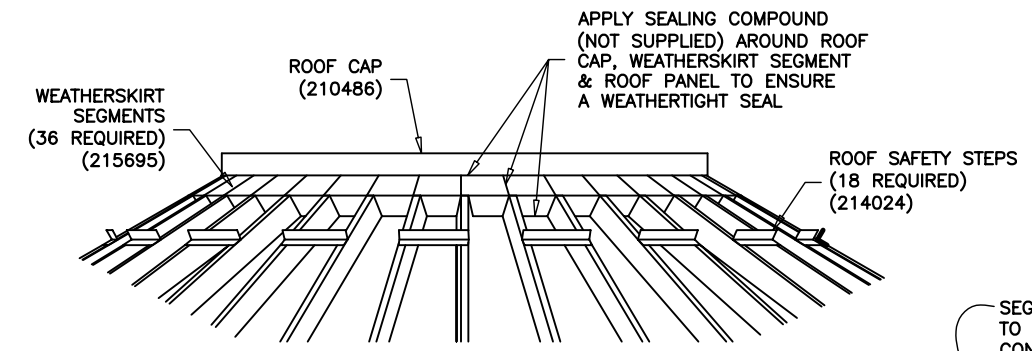

ROOF PEAK DETAIL

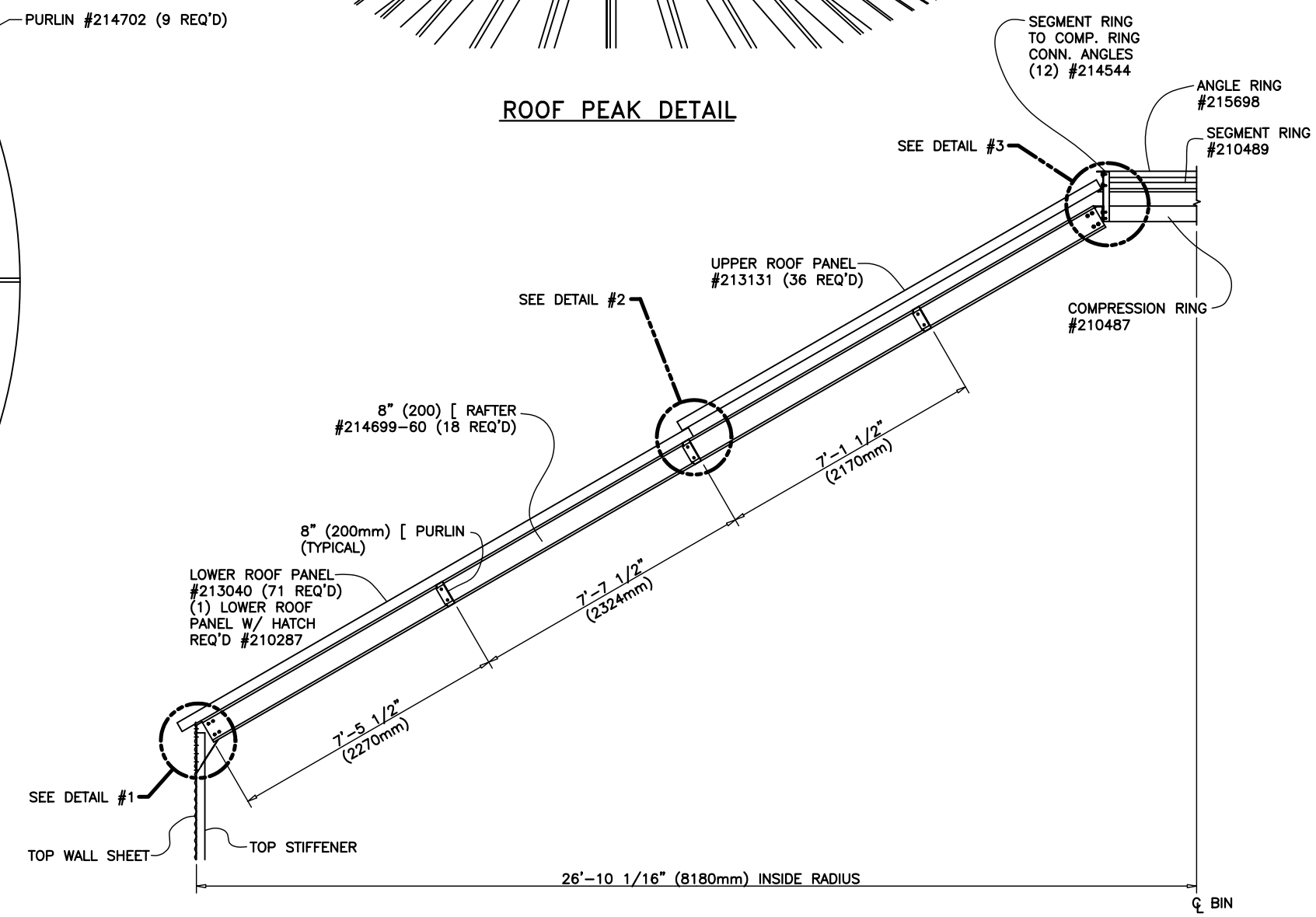

RAFTER SECTION

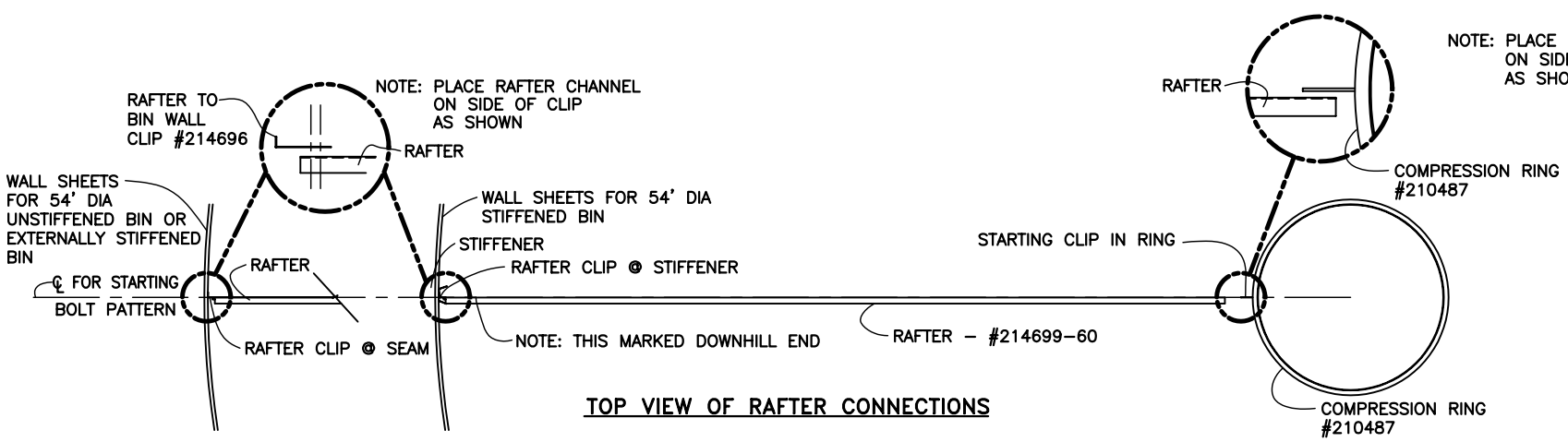

TOP VIEW OF RAFTER CONNECTIONS

NOTE: DO NOT TIGHTEN BOLTS UNTIL ALL RAFTERS AND PURLINS HAVE BEEN INSTALLED

REV	BY	DATE	DESCRIPTION OF CHANGE
B	MSB	8/30/02	SEE SHEET 3 FOR REVISIONS
A	JSD	7/15/02	SEE SHEET 3 FOR REVISIONS

SCAFCO Grain Systems Company
6200 E. Main Avenue
PO Box 11215
Spokane, WA 99211-1215, USA
Tel: 509-535-1571 * Fax: 509-535-9130 * mail@scafco.com * www.scafco.com

ALL DIMENSIONS IN INCHES – TOLERANCES – LINEAR ±1/16", ANGULAR ±1° (Except as noted)

54' DIAMETER BIN

ROOF ERECTION INSTRUCTIONS (60" PEAK OPENING)

	BY	DATE	DRAWING NO.:	REV.
DRAWN	JSD	20FEB02	54ROOF-60RC	B
CHECKED				
APPROVED	JT	20FEB02	SCALE: 1/4" = 1'-0" SHEET: 1 OF 3	

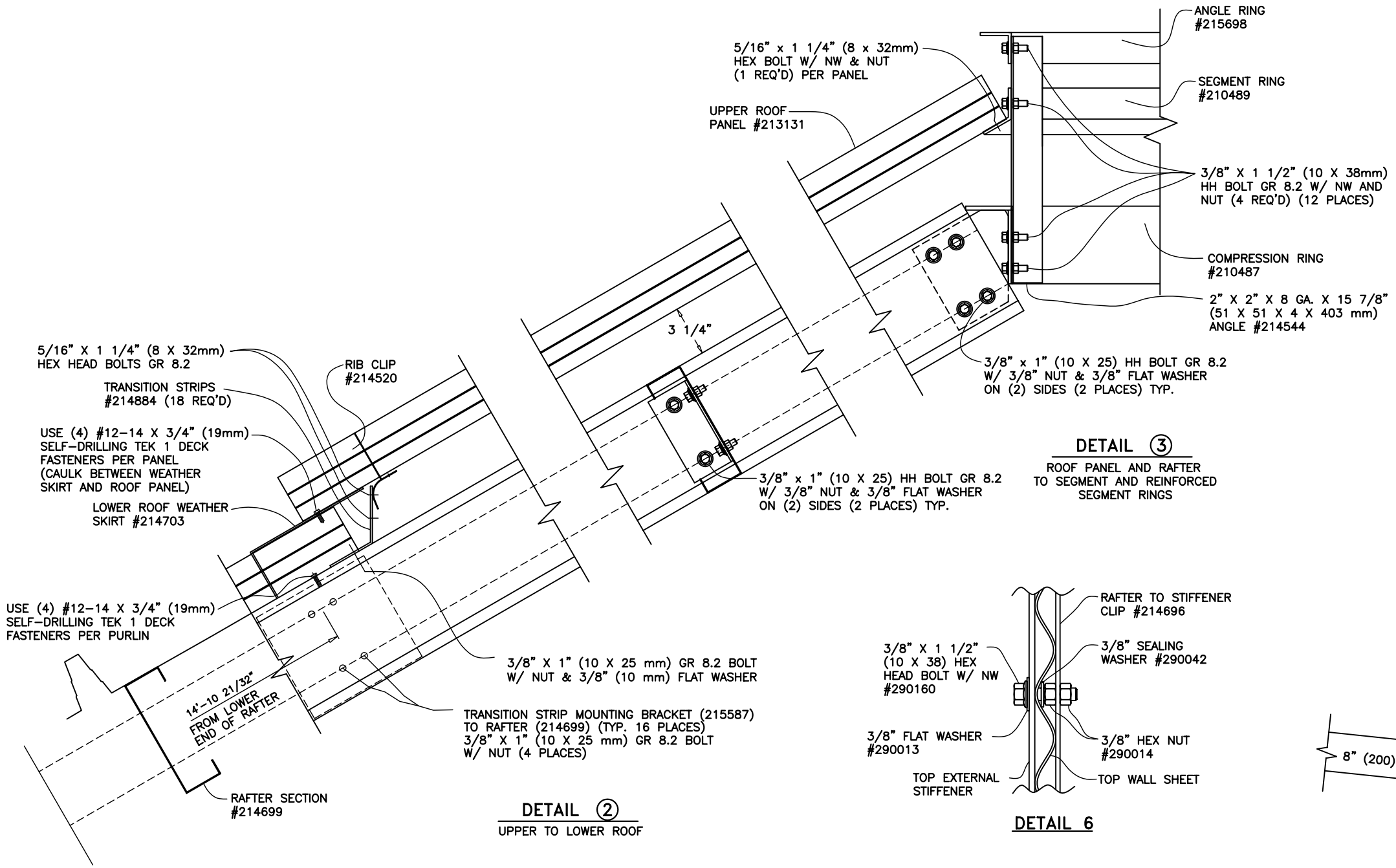

DETAIL ③

ROOF PANEL AND RAFTER TO SEGMENT AND REINFORCED SEGMENT RINGS

DETAIL ②

UPPER TO LOWER ROOF

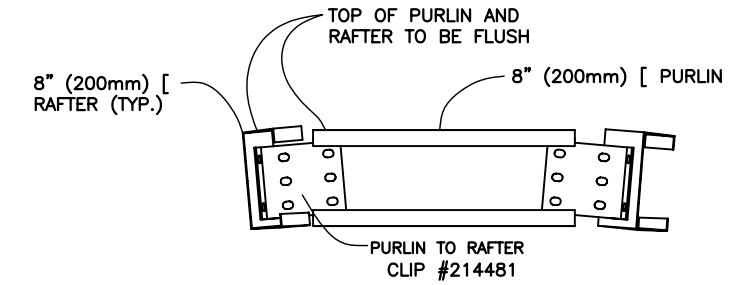

DETAIL ⑤

PURLIN CONNECTION BETWEEN RAFTERS

DETAIL 6

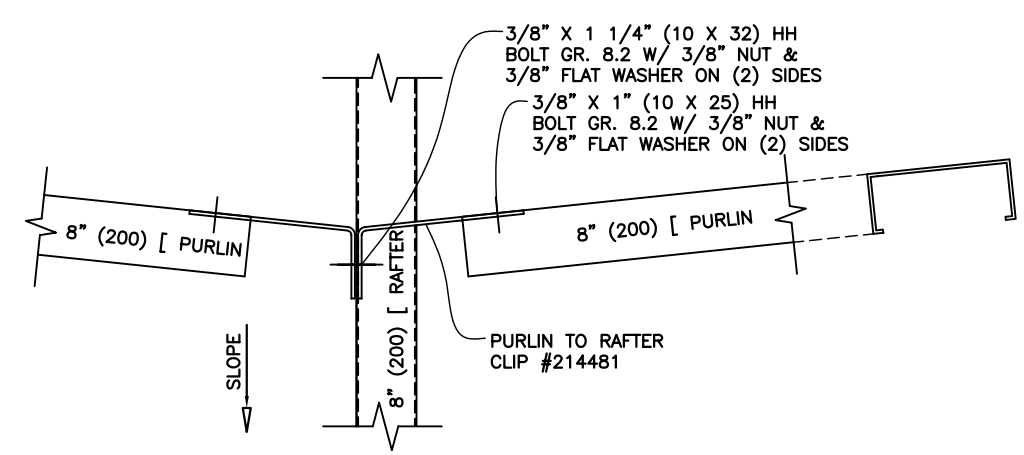

DETAIL ④

TOP VIEW OF RAFTER TO PURLIN CONNECTION

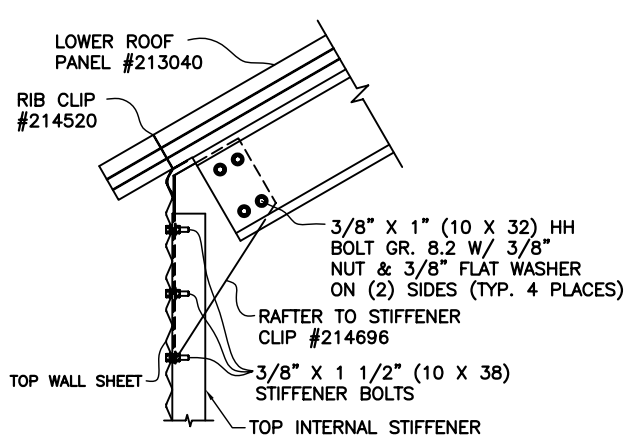

INTERNALLY STIFFENED BIN

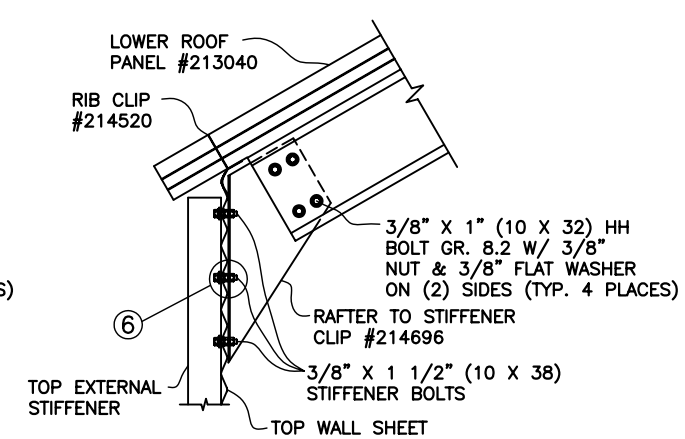

EXTERNALLY STIFFENED BIN

DETAIL ①

RAFTER TO STIFFENER

REV	BY	DATE	DESCRIPTION OF CHANGE
B	MSB	8/30/02	SEE SHEET 3 FOR REVISIONS
A	JSD	7/15/02	SEE SHEET 3 FOR REVISIONS

SCAFCO Grain Systems Company
6200 E. Main Avenue
PO Box 11215
Spokane, WA 99211-1215, USA
Tel: 509-535-1571 * Fax: 509-535-9130 * mail@scafco.com * www.scafco.com

ALL DIMENSIONS IN INCHES – TOLERANCES – LINEAR ±1/16", ANGULAR ±1° (Except as noted)

54' DIAMETER BIN

ROOF ERECTION INSTRUCTIONS
(60" PEAK OPENING)

	BY	DATE	DRAWING NO.:	REV.
DRAWN	JSD	20FEB02	54ROOF-60RC	B
CHECKED				
APPROVED	JT	20FEB02	SCALE: 1:4	SHEET: 2 OF 3

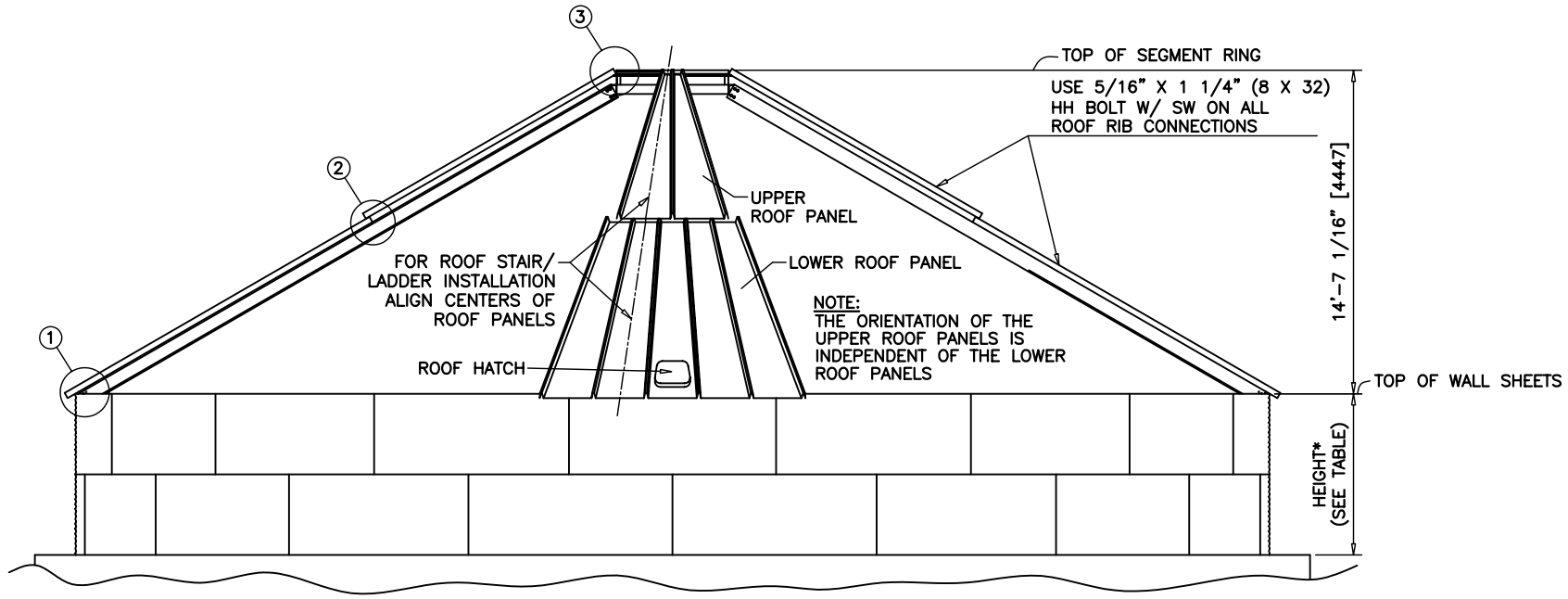

ELEVATION

STARTING WALL SHEET HEIGHT		
TOP STIFFENER	TOP SHEET	*HEIGHT
32" [813]	42 2/3" [1084]	44 5/16" [1125]
42 5/8" [1083]	10 2/3" [271]	54 15/16" [1396]
53 1/8" [1349]	21 1/3" [542]	65 5/8" [1667]
74 5/8" [1895]	42 2/3" [1084]	86 15/16" [2209]

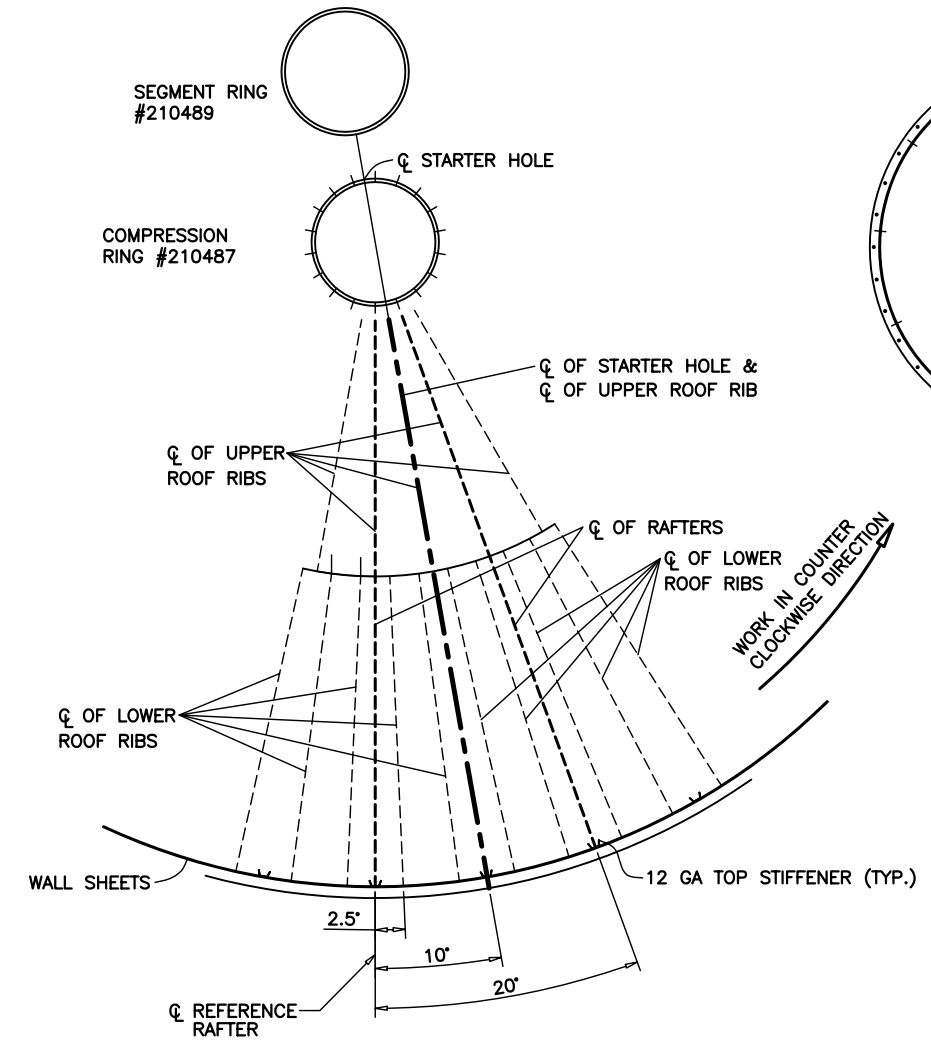

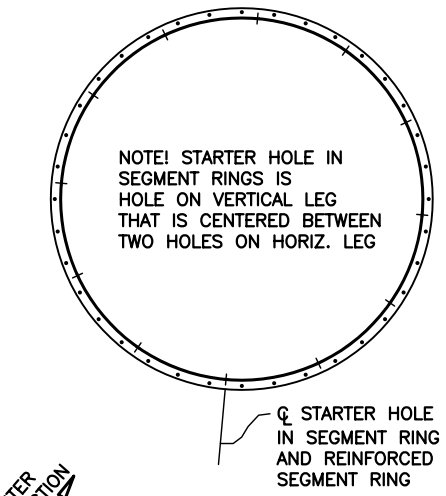

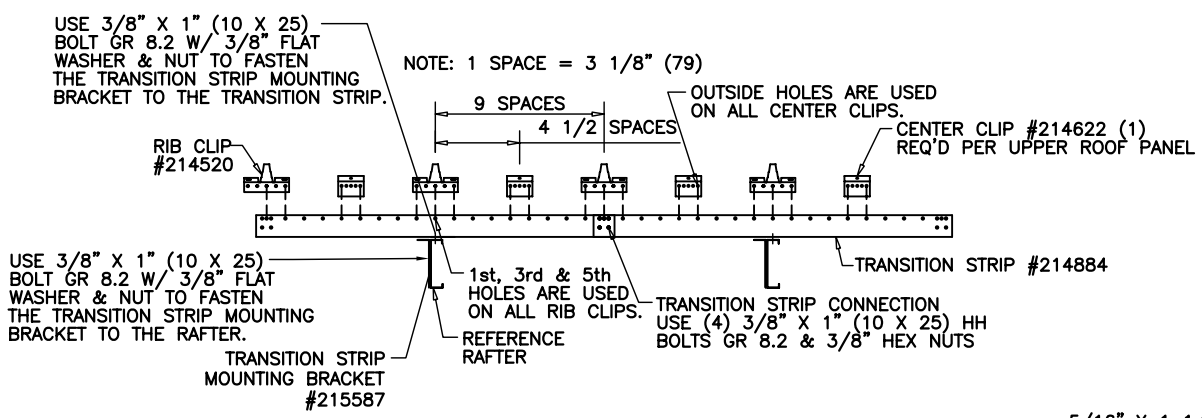

VIEW OF TRANSITION STRIP BETWEEN UPPER & LOWER ROOFS

NOTE:
SCAFCO RECOMMENDS AN EXPANSION JOINT IN THE SPOUTING OR A SLIP/SHEAR CONNECTION TO THE ROOF CAP DUE TO THE POSSIBILITY OF THE FOLLOWING:
- SETTLEMENT OF THE SILO;
- SETTLEMENT OF THE FOUNDATION;
- MOVEMENT OF THE SPOUTING.

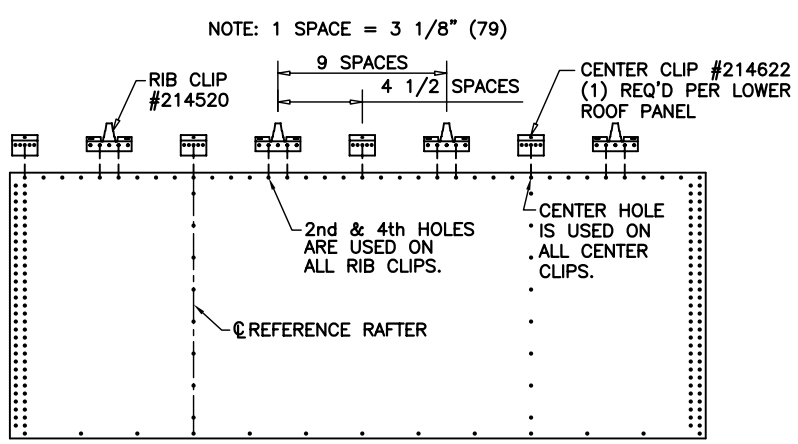

VIEW SHOWING CENTER & RIB CLIP CONNECTION TO TOP WALL SHEET

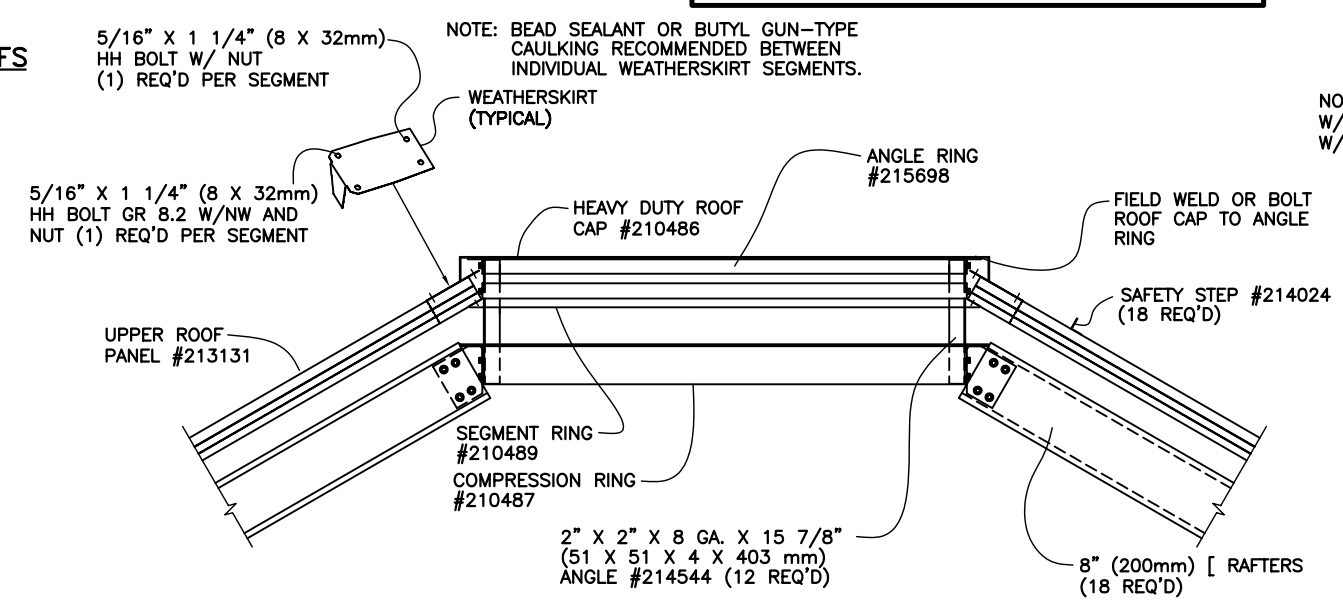

SECTION THRU ROOF CAP

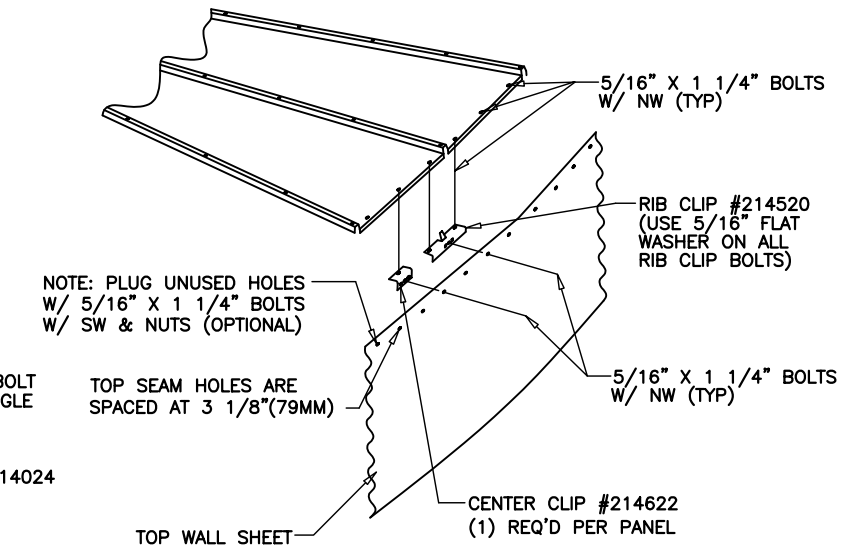

RIB/CENTER CLIP DETAIL

REV	BY	DATE	DESCRIPTION OF CHANGE
B	MSB	8/30/02	5/16" X 1-1/4" BOLTS WERE 5/16" X 3/4"
A	JSD	7/15/02	UPDATE VIEWS; ADD NOTES, TABLE

SCAFCO Grain Systems Company
6200 E. Main Avenue
PO Box 11215
Spokane, WA 99211-1215, USA
Tel: 509-535-1571 * Fax: 509-535-9130 * mail@scafco.com * www.scafco.com

ALL DIMENSIONS IN INCHES – TOLERANCES – LINEAR ±1/16", ANGULAR ±1° (Except as noted)

54' DIAMETER BIN

ROOF ERECTION INSTRUCTIONS
(60" PEAK OPENING)

	BY	DATE	DRAWING NO.:	REV.
DRAWN	JSD	20FEB02	54R00F-60RC	B
CHECKED				
APPROVED	JT	20FEB02	SCALE: 1/4" = 1'-0" SHEET: 3 OF 3	